XMT61X Series Intelligent PID Temperature Controller

- Input type cna be RTD input(Pt100、Cu50) or Thremocouple input(T、R、J、B、S、K、E、WRe3-WRe25)
- The instrucment has automaticing function to self adapt to different systems
- Instrument can be degrees Celsius, degrees Fahrenheit temperature
- Five control optional:
  - 0、Two alarm relay
  - 1、J1 alarm relay output; relay contact J2 PID output
  - 2、Two alarm relay output; SSR all the way non-contact level PID output
  - 3、Two alarm relay output; SSR-level all the way back to poor control output
  - 4、J1 alarm relay output; Backlash J2 relay control output

一、Specifications

- ◆ Power supply:AC/DC85～260V (50Hz/60Hz)
- ◆ Contact capacity:AC 250V/3A
- ◆ Contact life:1×10^5
- ◆ SSR-level:8V(Open-circuit voltage);
  30mA(short-circuit current)
- ◆ Temperature precision:0.2%FS
- ◆ Environment:0～+50℃;≤85%RH
- ◆ Outline and Panel cutout dimension:

Symbol	Display size		Dimension	Panel cutout dimension
	Top	Bottom		
XMT612	0.36	0.36	48×48×82	$45^{+1}\times45^{+1}$
XMT613	0.36	0.36	48×96×82	$44^{+1}\times92^{+1}$
XMT614	0.56	0.36	96×48×82	$92^{+1}\times44^{+1}$
XMT615	0.56	0.39	72×72×104	$68^{+1}\times68^{+1}$
XMT616	0.80	0.56	96×96×82	$91^{+1}\times91^{+1}$
XMT618	0.80	0.39	160×80×80	$152^{+1}\times76^{+1}$

二.Panel description

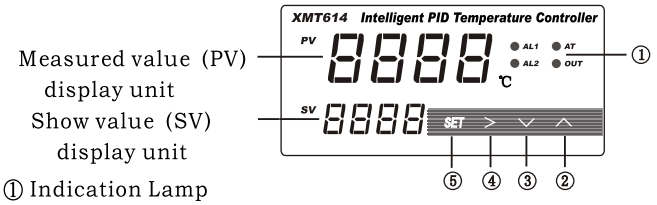

① Indication Lamp
AL1-Relay J1 output lamp:Lights when output is turned on
AL2-Relay J2 output lamp:Lights when output is turned on
AT-Autotunning lamp:Flashes during autotunning execution
Out-Control output indicator

② Up key:Used for selecting next parameter or increase numerals

③ Down key:Used for selecting previous parameterand and used to increase numerals

④ Shift key:Used to shift the digital when the setting is changed and used to perform autotunning function

⑤ Set key:Used for parameter registration/calling up

⑥ Measured value (PV) display unit

三、Parameter setting guide

(一)Initiation function parameter(Log in by inputting password" 0089" after pressing set key)

1.Detials of parameters

Symbol		Description	Range	Factory value
InEY	inty	Input type	Table —	P10.0
outY	outy	Control output type	0、1、2、3、4	2
HY	Hy	Autotuning pV bias	0～9999	0.3
PSb	Psb	pV bias	-1000～1000	0.0
rd	rd	Control action type	0:heat;1:cool	0
CorF	CorF	Engineering un selection	0：℃；1：F	0
End	End	End		

2.Parameters of the initial functional description

1)inty: Temperature sensor type list

Table —

Symbol	Name	Sensor type	Temperature range℃	Mark
t	T	T TC	-200～400	Internal resistance 100KΩ
r	R	R TC	-50～1600	
J	J	J TC	-200～1200	
WrE	WRE	WRE TC	0～2300	
b	B	B TC	350～1800	
S	S	S TC	-50～1600	
K	K	K TC	-200～1300	
E	E	E TC	-200～900	
P10.0	P10.0	Pt100 RTD	-199.9～600.0	Constant current output 0.2mA
P100	P100	Pt100 RTD	-199～600	
Cu50	Cu50	Cu50 RTD	-50.0～150.0	

2)outy: Control output type

0:Relay J1、J2 alarm output(see Figure —);
SSR output is invalid, SV value is not valid

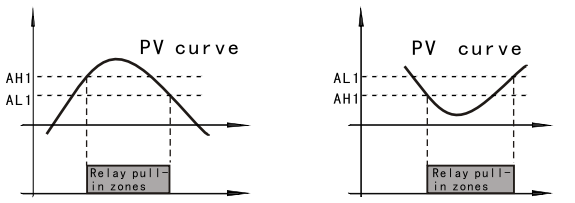

(AH>AL)
Upper limit alarm

(AH<AL)
Lower limit alarm

(Figuer —)

1:Alarm output relay J1; relay J2 have contact-type PID control output (see Figure 2); SSR output is invalid, Ah2, AL2 settings does not work, used for temperature control, the target for the SV

2:Relays J1, J2 alarm output; SSR non-contact type PID control output (see Figure 2),
Used for temperature control, the target for the SV

3:Relay J1、J2 alarm output;Backlash SSR Relay control output(Figure 三),SV is control value

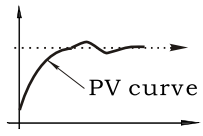

(Figuer 二)

In this way, mainly for the constant temperature;
Control mode, SV for the temperature settings

4:J1 alarm relay output; J2 to poor control output (Figure 3), SV values for the control, SSR output is invalid,set Ah2、Al2 invalid

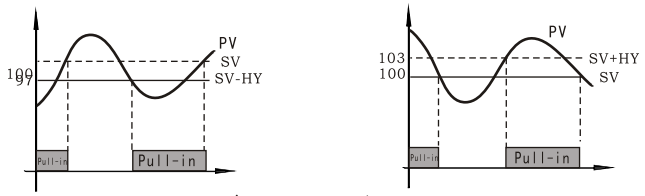

(Figuer 三)

Rd=0
PV≤(SV-HY)
Pull-in relay/SSR output
PV≥SV
Relay or SSR output to close to release

Rd=1
PV≥(SV+HY)
Pull-in relay/SSR output
PV≤SV
Relay or SSR output to close to release

3)Hy: Digital control Backlash

When OUTY=0、1、2, HY is invalid,Specific reference to the Figure 三

4)Psb: Zero error correction

Amendments End value = amended before the value + PSB

5)rd: Heat、Cool selection

When inactive OUTY = 0, the specific reference on the Figure set 二、三

6)Corf: Choice of temperature actions

F and C for the conversion relations:
F=9/5℃+32(℃: degree Celsius;F: degree fahrenheit)

3.Parameters settings procedure

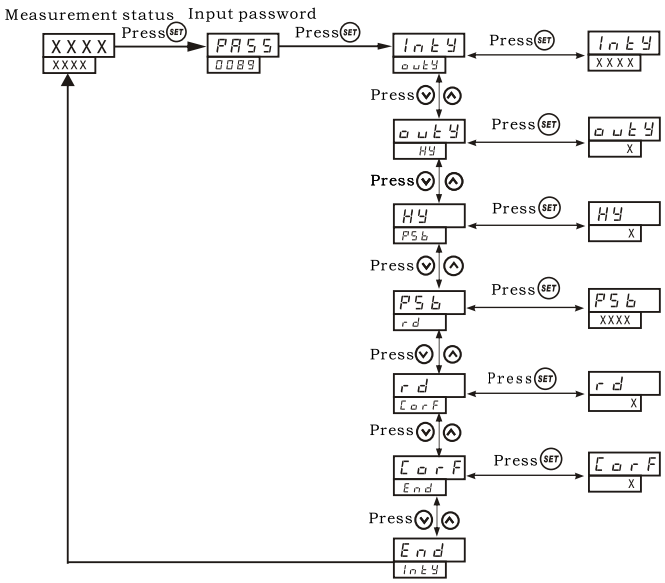

(二)Initiation function parameter(Log in by inputting password" 0036" after pressing set key)

1.Detial of PID parameters

Symbol		Description	Range	Factory value
P	P	Proportional band	0.1~99.9%	5.0
I	i	Integral timre	2~1999(minute)	100
d	d	Derivative time	0~399(minute)	20
SouF	SouF	Overshoot suppression factor	0.0~1.0	0.2
ot	ot	Proportional cycle	2~199(minute)	2
FILt	FiLt	Digital filter factor	0~3	0
End	End	End		

2.PID parameter setting guide

Note 1(P):the temperature oscillation is inverse proportion of P value and proportion of the response speed

Note 2(i):Set the time of integral action which eliminate the offset occurring in proportional control

Note 3(d):Set the time of derivative action which prevents ripples by predicting output change abd thus improves control stability

Note 4(Souf):Overshooting and undershooting are restricted by the Souf and incrase of the parameter can suppress the overshooting

Note 5(ot):In general,control cycle is 2 when output type is voltage pluse output,and is 5-15 when output type is relay contact output.

Note 6(Filt):can be set to 0、1、2、3.one of 0 indicated that they had no digital filter,1 weak,2,3 strong. Coefficients the greater the figure shows that the more stale,the greater the lag.

Start AT function: In the constant temperature control, constant or if they can not over-temperature phenomena, can activate the self-tuning instrument functions, more appropriate instrument calculates the PID parameters.Long press > keys, flashing lights until the AT, instrument to enter a state of self-tuning; AT lamp goes out, the end of self-tuning, instrument set by self-tuning PID parameter adjustment

Ending AT function: a long three seconds by the > key, AT light is off, the end of self-tuning, the parameters do not change

- Self-tuning from time to time, there will be a significant over-temperature, please lower SV values appropriate to prevent the accident
- Must be properly connected to the corresponding sensor, heater, otherwise self-tuning unable to complete
- Self-tuning system response time depends on speed, ranging from a few minutes to several hours
- Self-tuning is a function of time on the start line, do not need to start every time

(三)SV and alarm parameters(Log in by inputing password"0001' after pressing set key)

1.Detail of SV and alarm parameters

Symbol		Description	Range	Factory value
Su	Sv	set value	Arbitrary set	80.0
AH1	AH1	Relay J1 pull-in set value		80.0
AL1	AL1	Relay J1 release set value		90.0
AH2	AH2	Relay J2 pull-in set value		80.0
AL2	AL2	Relay J2 release set value		90.0
End	End	End		

Note:In normal display mode,the SV is increased by using the Up and Down key.

四、Manual output

Entering the manually state: PID regulator, the long press SET button four seconds, AT / M lamp Always entered manually, and by an increase at this time, reducing the key instrument by the time the proportion of output, SV output window shows the percentage

From the manual states: SET button long by 4 seconds, AT / M lights out often, from the manual state

五、Wiring diagram